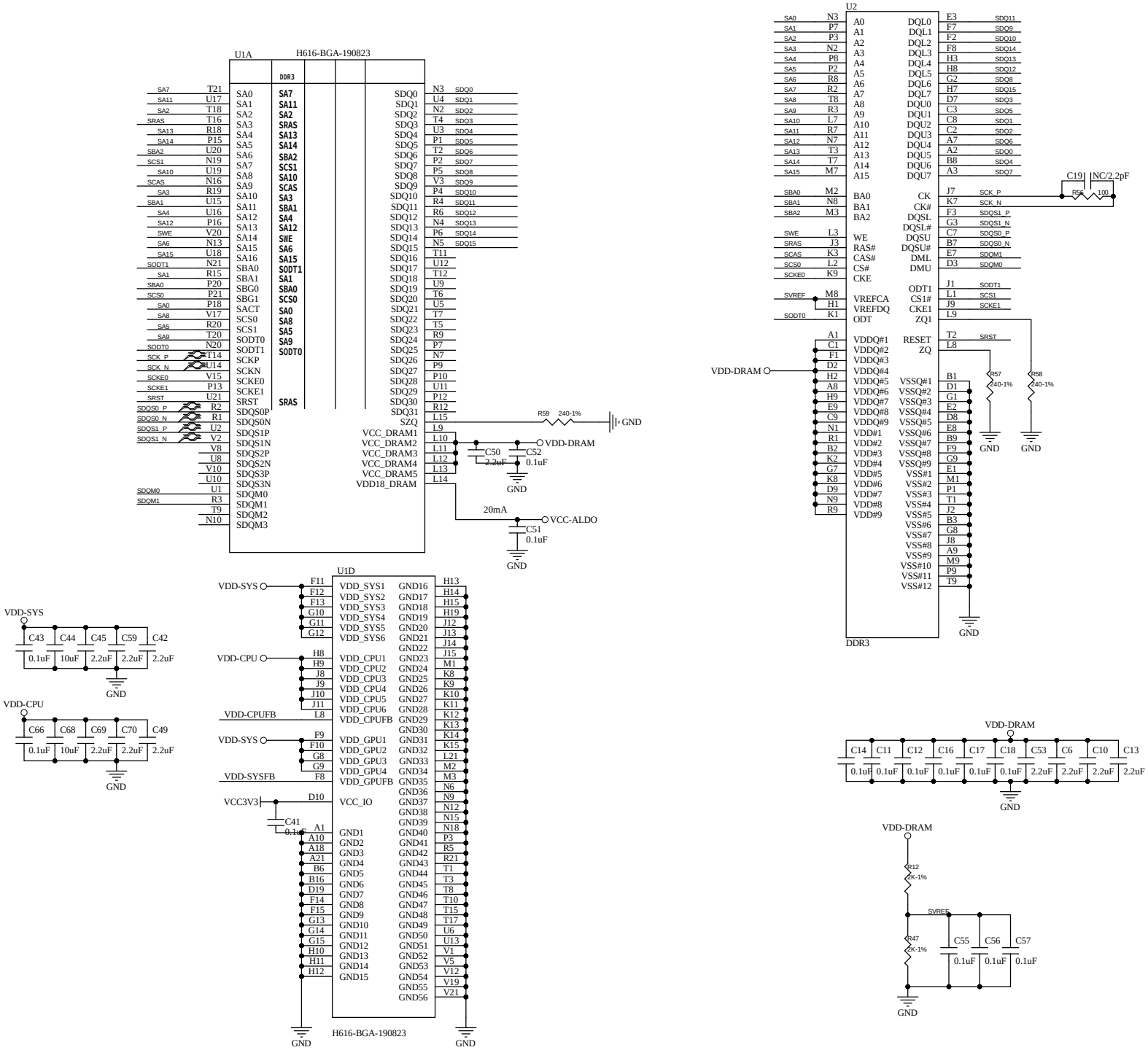
U1A
H616-BGA-190823
DDR3
SA7 T21
SA11 U17
SA2 T18
SRAS T16
SA13 R18
SA14 P15
SBA2 U20
SCS1 N19
SA10 U19
SCAS N16
SA3 R19
SBA1 U15
SA4 U16
SA12 P16
SWE V20
SA6 N13
SA15 U18
SODT1 N21
SA1 R15
SBA0 P20
SCS0 P21
SA0 P18
SA8 V17
SA5 R20
SA9 T20
SODT0 N20
SCK_P T14
SCK_N U14
SCKE0 V15
SCKE1 P13
SRST U21
SDQS0_P R2
SDQS0_N R1
SDQS1_P U2
SDQS1_N V2
V8
U8
V10
U10
SDQM0 U1
SDQM1 R3
T9
N10
SA0 SA1 SA2 SRAS SA3 SA4 SA5 SA6 SA7 SA8 SA9 SA10 SA11 SA12 SA13 SA14 SA15 SA16 SBA0 SBA1 SBG0 SBG1 SACT SCS0 SCS1 SODT0 SODT1 SCKP SCKN SCKE0 SCKE1 SRST SDQS0P SDQS0N SDQS1P SDQS1N SDQS2P SDQS2N SDQS3P SDQS3N SDQM0 SDQM1 SDQM2 SDQM3
SA7 SA11 SA2 SRAS SA13 SA14 SBA2 SCS1 SA10 SCAS SA3 SBA1 SA4 SA12 SWE SA6 SA15 SODT1 SA1 SBA0 SCS0 SA0 SA8 SA5 SA9 SODT0 SRAS
SDQ0 N3 SDQ0
SDQ1 U4 SDQ1
SDQ2 N2 SDQ2
SDQ3 T4 SDQ3
SDQ4 U3 SDQ4
SDQ5 P1 SDQ5
SDQ6 T2 SDQ6
SDQ7 P2 SDQ7
SDQ8 P5 SDQ8
SDQ9 V3 SDQ9
SDQ10 P4 SDQ10
SDQ11 R4 SDQ11
SDQ12 R6 SDQ12
SDQ13 N4 SDQ13
SDQ14 P6 SDQ14
SDQ15 N5 SDQ15
SDQ16 T11
SDQ17 U12
SDQ18 T12
SDQ19 U9
SDQ20 T6
SDQ21 U5
SDQ22 T7
SDQ23 T5
SDQ24 R9
SDQ25 P7
SDQ26 N7
SDQ27 P9
SDQ28 P10
SDQ29 U11
SDQ30 P12
SDQ31 R12
SZQ L15
VCC_DRAM1 L9
VCC_DRAM2 L10
VCC_DRAM3 L11
VCC_DRAM4 L12
VCC_DRAM5 L13
VDD18_DRAM L14
R59 240-1%
GND
VDD-DRAM
C50 2.2uF
C52 0.1uF
GND
20mA
VCC-ALDO
C51 0.1uF
GND
U2
SA0 N3 A0
SA1 P7 A1
SA2 P3 A2
SA3 N2 A3
SA4 P8 A4
SA5 P2 A5
SA6 R8 A6
SA7 R2 A7
SA8 T8 A8
SA9 R3 A9
SA10 L7 A10
SA11 R7 A11
SA12 N7 A12
SA13 T3 A13
SA14 T7 A14
SA15 M7 A15
SBA0 M2 BA0
SBA1 N8 BA1
SBA2 M3 BA2
SWE L3 WE
SRAS J3 RAS#
SCAS K3 CAS#
SCS0 L2 CS#
SCKE0 K9 CKE
SVREF M8 VREFCA
H1 VREFDQ
SODT0 K1 ODT
A1 C1 F1 D2 H2 A8 H9 E9 C9 N1 R1 B2 K2 G7 K8 D9 N9 R9
VDD-DRAM
VDDQ#1 VDDQ#2 VDDQ#3 VDDQ#4 VDDQ#5 VDDQ#6 VDDQ#7 VDDQ#8 VDDQ#9
VDD#1 VDD#2 VDD#3 VDD#4 VDD#5 VDD#6 VDD#7 VDD#8 VDD#9
DQL0 DQL1 DQL2 DQL3 DQL4 DQL5 DQL6 DQL7
DQU0 DQU1 DQU2 DQU3 DQU4 DQU5 DQU6 DQU7
CK CK# DQSL DQSL# DQSU DQSU# DML DMU
ODT1 CS1# CKE1 ZQ1
RESET ZQ
VSSQ#1 VSSQ#2 VSSQ#3 VSSQ#4 VSSQ#5 VSSQ#6 VSSQ#7 VSSQ#8 VSSQ#9
VSS#1 VSS#2 VSS#3 VSS#4 VSS#5 VSS#6 VSS#7 VSS#8 VSS#9 VSS#10 VSS#11 VSS#12
E3 SDQ11
F7 SDQ9
F2 SDQ10
F8 SDQ14
H3 SDQ13
H8 SDQ12
G2 SDQ8
H7 SDQ15
D7 SDQ3
C3 SDQ5
C8 SDQ1
C2 SDQ2
A7 SDQ6
A2 SDQ0
B8 SDQ4
A3 SDQ7
J7 SCK_P
K7 SCK_N
F3 SDQS1_P
G3 SDQS1_N
C7 SDQS0_P
B7 SDQS0_N
E7 SDQM1
D3 SDQM0
J1 SODT1
L1 SCS1
J9 SCKE1
L9
T2 SRST
L8
B1 D1 G1 E2 D8 E8 B9 F9 G9 E1 M1 P1 T1 J2 B3 G8 J8 A9 M9 P9 T9
C19 NC/2.2pF
R56 100
R57 240-1%
R58 240-1%
GND
DDR3
U1D
VDD-SYS
F11 F12 F13 G10 G11 G12
VDD_SYS1 VDD_SYS2 VDD_SYS3 VDD_SYS4 VDD_SYS5 VDD_SYS6
VDD-CPU
H8 H9 J8 J9 J10 J11
VDD_CPU1 VDD_CPU2 VDD_CPU3 VDD_CPU4 VDD_CPU5 VDD_CPU6
VDD-CPUFB
L8
VDD_CPUFB
VDD-SYS
F9 F10 G8 G9
VDD_GPU1 VDD_GPU2 VDD_GPU3 VDD_GPU4
VDD-SYSFB
F8
VDD_GPUFB
VCC3V3
D10
VCC_IO
C41 0.1uF
A1 A10 A18 A21 B6 B16 D19 F14 F15 G13 G14 G15 H10 H11 H12
GND1 GND2 GND3 GND4 GND5 GND6 GND7 GND8 GND9 GND10 GND11 GND12 GND13 GND14 GND15
GND16 GND17 GND18 GND19 GND20 GND21 GND22 GND23 GND24 GND25 GND26 GND27 GND28 GND29 GND30 GND31 GND32 GND33 GND34 GND35 GND36 GND37 GND38 GND39 GND40 GND41 GND42 GND43 GND44 GND45 GND46 GND47 GND48 GND49 GND50 GND51 GND52 GND53 GND54 GND55 GND56
H13 H14 H15 H19 J12 J13 J14 J15 M1 K8 K9 K10 K11 K12 K13 K14 K15 L21 M2 M3 N6 N9 N12 N15 N18 P3 R5 R21 T1 T3 T8 T10 T15 T17 U6 U13 V1 V5 V12 V19 V21
H616-BGA-190823
GND
VDD-SYS
C43 0.1uF C44 10uF C45 2.2uF C59 2.2uF C42 2.2uF
GND
VDD-CPU
C66 0.1uF C68 10uF C69 2.2uF C70 2.2uF C49 2.2uF
GND
VDD-DRAM
C14 0.1uF C11 0.1uF C12 0.1uF C16 0.1uF C17 0.1uF C18 0.1uF C53 2.2uF C6 2.2uF C10 2.2uF C13 2.2uF
GND
VDD-DRAM
R12 2K-1%
SVREF
R47 2K-1%
C55 0.1uF C56 0.1uF C57 0.1uF
GND

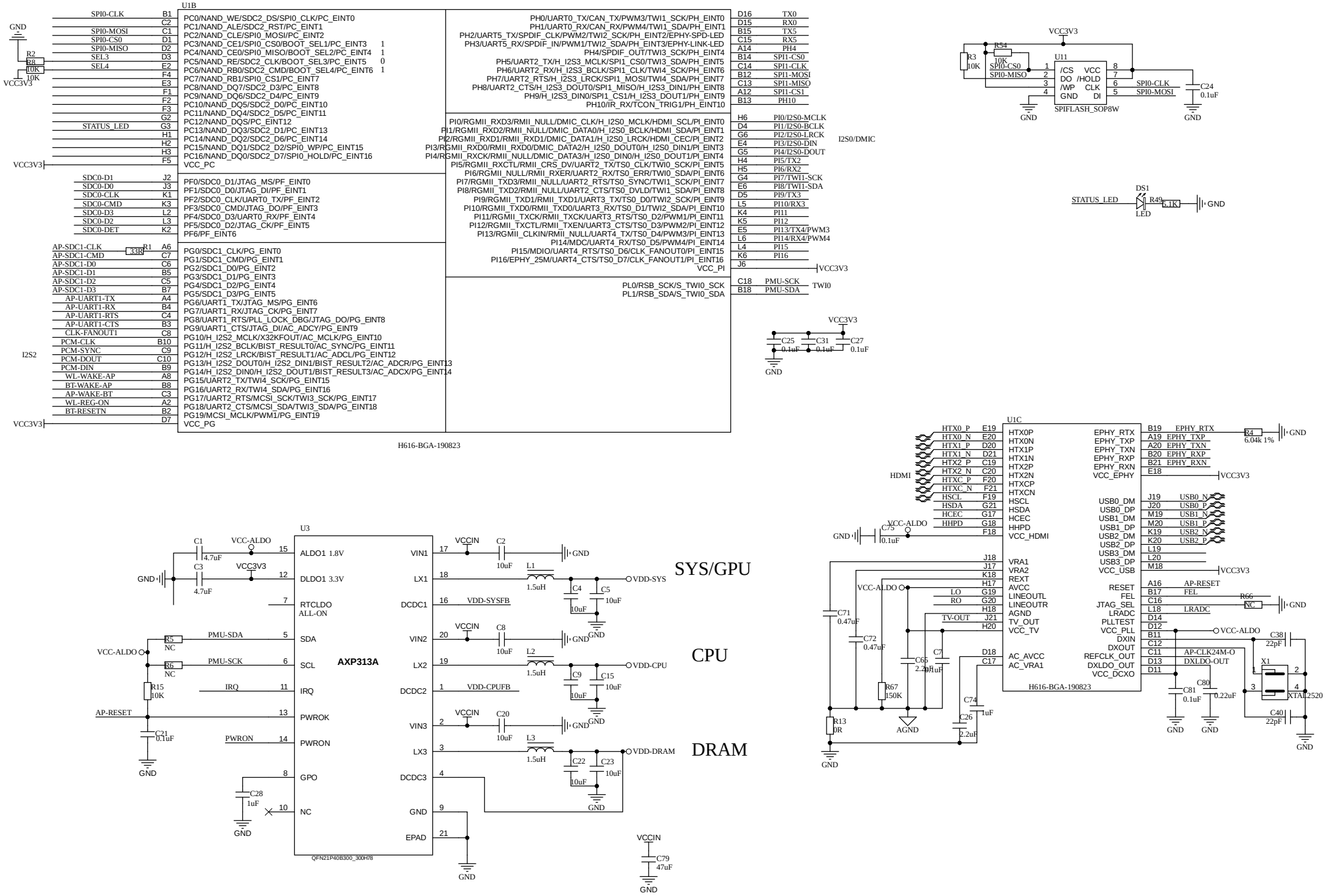
U1B
PC0/NAND_WE/SDC2_DS/SPI0_CLK/PC_EINT0
PC1/NAND_ALE/SDC2_RST/PC_EINT1
PC2/NAND_CLE/SPI0_MOSI/PC_EINT2
PC3/NAND_CE1/SPI0_CS0/BOOT_SEL1/PC_EINT3
PC4/NAND_CE0/SPI0_MISO/BOOT_SEL2/PC_EINT4
PC5/NAND_RE/SDC2_CLK/BOOT_SEL3/PC_EINT5
PC6/NAND_RB0/SDC2_CMD/BOOT_SEL4/PC_EINT6
PC7/NAND_RB1/SPI0_CS1/PC_EINT7
PC8/NAND_DQ7/SDC2_D3/PC_EINT8
PC9/NAND_DQ6/SDC2_D4/PC_EINT9
PC10/NAND_DQ5/SDC2_D0/PC_EINT10
PC11/NAND_DQ4/SDC2_D5/PC_EINT11
PC12/NAND_DQS/PC_EINT12
PC13/NAND_DQ3/SDC2_D1/PC_EINT13
PC14/NAND_DQ2/SDC2_D6/PC_EINT14
PC15/NAND_DQ1/SDC2_D2/SPI0_WP/PC_EINT15
PC16/NAND_DQ0/SDC2_D7/SPI0_HOLD/PC_EINT16
VCC_PC
PF0/SDC0_D1/JTAG_MS/PF_EINT0
PF1/SDC0_D0/JTAG_DI/PF_EINT1
PF2/SDC0_CLK/UART0_TX/PF_EINT2
PF3/SDC0_CMD/JTAG_DO/PF_EINT3
PF4/SDC0_D3/UART0_RX/PF_EINT4
PF5/SDC0_D2/JTAG_CK/PF_EINT5
PF6/PF_EINT6
PG0/SDC1_CLK/PG_EINT0
PG1/SDC1_CMD/PG_EINT1
PG2/SDC1_D0/PG_EINT2
PG3/SDC1_D1/PG_EINT3
PG4/SDC1_D2/PG_EINT4
PG5/SDC1_D3/PG_EINT5
PG6/UART1_TX/JTAG_MS/PG_EINT6
PG7/UART1_RX/JTAG_CK/PG_EINT7
PG8/UART1_RTS/PLL_LOCK_DBG/JTAG_DO/PG_EINT8
PG9/UART1_CTS/JTAG_DI/AC_ADCY/PG_EINT9
PG10/H_I2S2_MCLK/X32KFOUT/AC_MCLK/PG_EINT10
PG11/H_I2S2_BCLK/BIST_RESULT0/AC_SYNC/PG_EINT11
PG12/H_I2S2_LRCK/BIST_RESULT1/AC_ADCL/PG_EINT12
PG13/H_I2S2_DOUT0/H_I2S2_DIN1/BIST_RESULT2/AC_ADCR/PG_EINT13
PG14/H_I2S2_DIN0/H_I2S2_DOUT1/BIST_RESULT3/AC_ADCX/PG_EINT14
PG15/UART2_TX/TWI4_SCK/PG_EINT15
PG16/UART2_RX/TWI4_SDA/PG_EINT16
PG17/UART2_RTS/MCSI_SCK/TWI3_SCK/PG_EINT17
PG18/UART2_CTS/MCSI_SDA/TWI3_SDA/PG_EINT18
PG19/MCSI_MCLK/PWM1/PG_EINT19
VCC_PG
PH0/UART0_TX/CAN_TX/PWM3/TWI1_SCK/PH_EINT0
PH1/UART0_RX/CAN_RX/PWM4/TWI1_SDA/PH_EINT1
PH2/UART5_TX/SPDIF_CLK/PWM2/TWI2_SCK/PH_EINT2/EPHY-SPD-LED
PH3/UART5_RX/SPDIF_IN/PWM1/TWI2_SDA/PH_EINT3/EPHY-LINK-LED
PH4/SPDIF_OUT/TWI3_SCK/PH_EINT4
PH5/UART2_TX/H_I2S3_MCLK/SPI1_CS0/TWI3_SDA/PH_EINT5
PH6/UART2_RX/H_I2S3_BCLK/SPI1_CLK/TWI4_SCK/PH_EINT6
PH7/UART2_RTS/H_I2S3_LRCK/SPI1_MOSI/TWI4_SDA/PH_EINT7
PH8/UART2_CTS/H_I2S3_DOUT0/SPI1_MISO/H_I2S3_DIN1/PH_EINT8
PH9/H_I2S3_DIN0/SPI1_CS1/H_I2S3_DOUT1/PH_EINT9
PH10/IR_RX/TCON_TRIG1/PH_EINT10
PI0/RGMII_RXD3/RMII_NULL/DMIC_CLK/H_I2S0_MCLK/HDMI_SCL/PI_EINT0
PI1/RGMII_RXD2/RMII_NULL/DMIC_DATA0/H_I2S0_BCLK/HDMI_SDA/PI_EINT1
PI2/RGMII_RXD1/RMII_RXD1/DMIC_DATA1/H_I2S0_LRCK/HDMI_CEC/PI_EINT2
PI3/RGMII_RXD0/RMII_RXD0/DMIC_DATA2/H_I2S0_DOUT0/H_I2S0_DIN1/PI_EINT3
PI4/RGMII_RXCK/RMII_NULL/DMIC_DATA3/H_I2S0_DIN0/H_I2S0_DOUT1/PI_EINT4
PI5/RGMII_RXCTL/RMII_CRS_DV/UART2_TX/TS0_CLK/TWI0_SCK/PI_EINT5
PI6/RGMII_NULL/RMII_RXER/UART2_RX/TS0_ERR/TWI0_SDA/PI_EINT6
PI7/RGMII_TXD3/RMII_NULL/UART2_RTS/TS0_SYNC/TWI1_SCK/PI_EINT7
PI8/RGMII_TXD2/RMII_NULL/UART2_CTS/TS0_DVLD/TWI1_SDA/PI_EINT8
PI9/RGMII_TXD1/RMII_TXD1/UART3_TX/TS0_D0/TWI2_SCK/PI_EINT9
PI10/RGMII_TXD0/RMII_TXD0/UART3_RX/TS0_D1/TWI2_SDA/PI_EINT10
PI11/RGMII_TXCK/RMII_TXCK/UART3_RTS/TS0_D2/PWM1/PI_EINT11
PI12/RGMII_TXCTL/RMII_TXEN/UART3_CTS/TS0_D3/PWM2/PI_EINT12
PI13/RGMII_CLKIN/RMII_NULL/UART4_TX/TS0_D4/PWM3/PI_EINT13
PI14/MDC/UART4_RX/TS0_D5/PWM4/PI_EINT14
PI15/MDIO/UART4_RTS/TS0_D6/CLK_FANOUT0/PI_EINT15
PI16/EPHY_25M/UART4_CTS/TS0_D7/CLK_FANOUT1/PI_EINT16
VCC_PI
PL0/RSB_SCK/S_TWI0_SCK
PL1/RSB_SDA/S_TWI0_SDA
H616-BGA-190823
I2S0/DMIC
TWI0
I2S2
U11
SPIFLASH_SOP8W
DS1
LED
U1C
HDMI
H616-BGA-190823
U3
AXP313A
QFN21P40B300_300H78
SYS/GPU
CPU
DRAM
VDD-SYS
VDD-CPU
VDD-DRAM
VDD-SYSFB
VDD-CPUFB
VCC-ALDO
VCC3V3
VCCIN
GND
AGND